Draw No. AA/F/9862	Rev.	DIMENSIONS IN MILLIMETRES	DO NOT SCALE

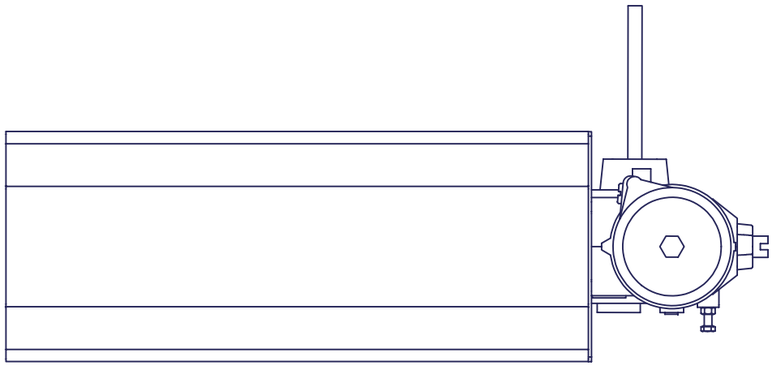

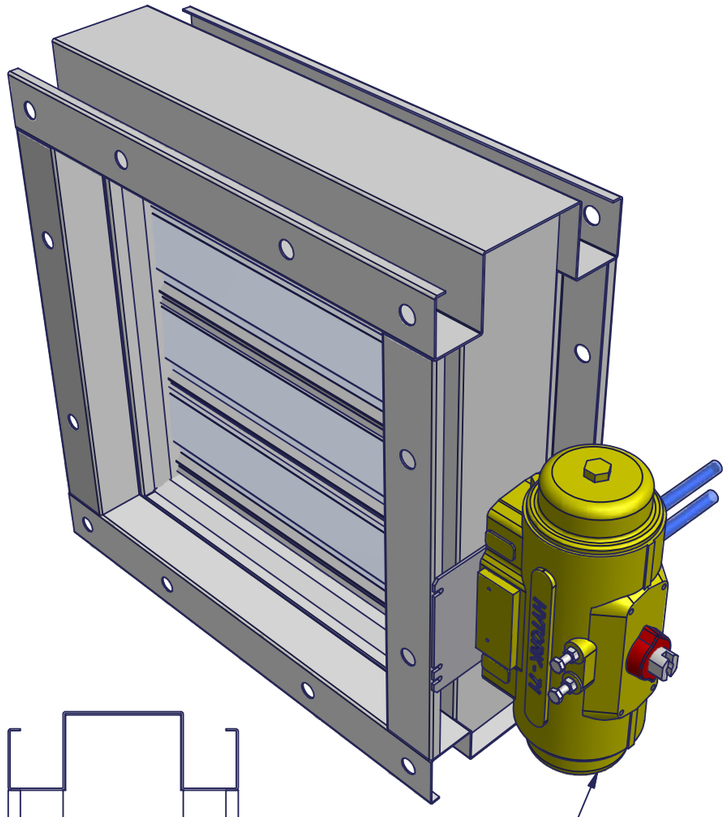

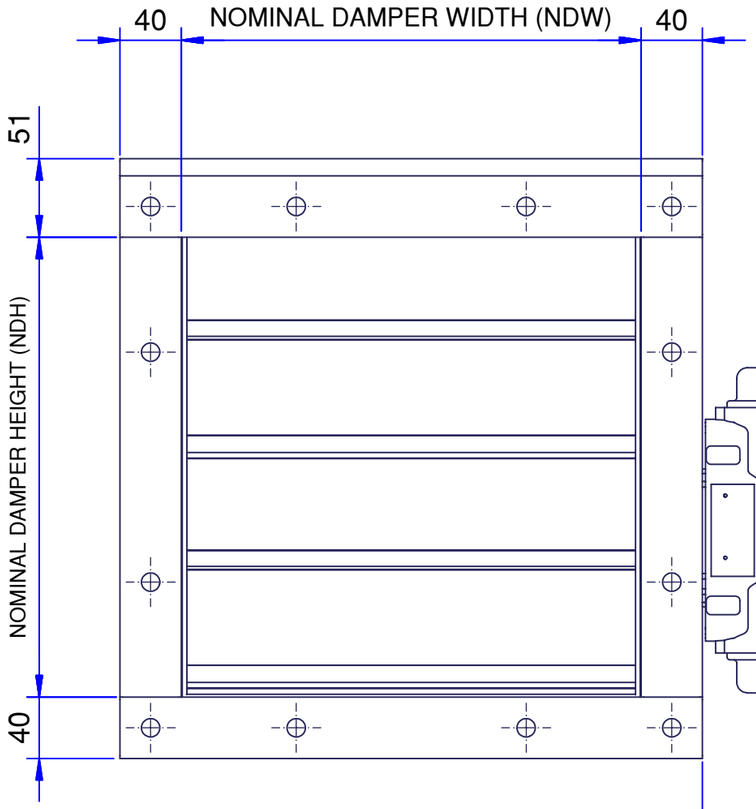

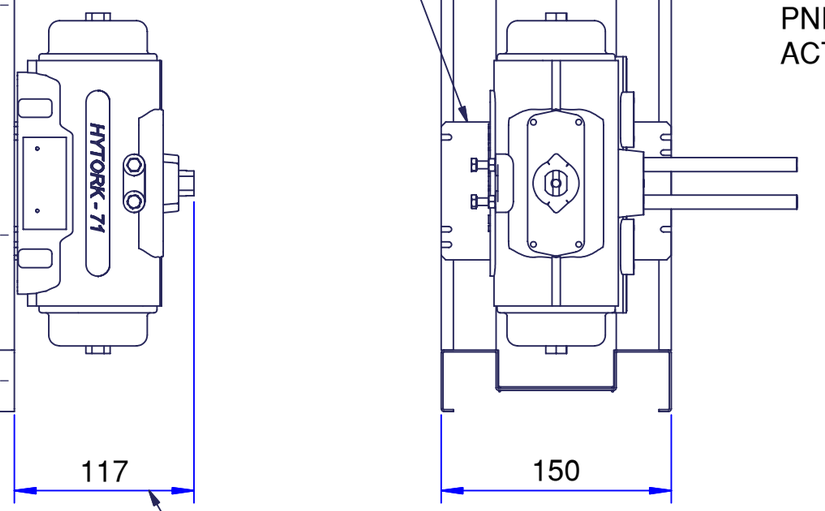

TRANSIT & HYTORK ACTUATOR MOUNTING PLATE

PNEUMATIC ACTUATOR

130mm MINIMUM REMOVAL DIMENSION

actionair
© RUSKIN AIR MANAGEMENT LIMITED
South Street, Whitstable
Kent CT5 3DU
Telephone: 01227 276100
Facsimile: 01227 264262
www.actionair.co.uk

SHEET 2 OF 2

DAMPERS AND ACTUATORS SUPPLIED LOOSE FOR ON SITE FITTING BY OTHERS.

A60 MARINE DAMPERS ARE LLOYDS REGISTER APPROVED FOR CLASS A60 DIVISIONS BULKHEADS AND DECKS WITH A MINIMUM LENGTH OF 725mm INSULATION BASED ON APPROVED SIZES-REFER TO CATALOGUE.

Rev	Change	Initials	Dates

Drawn by	S.W.	23/05/2006
Checked by	S.W.	23/05/2006
Approved by	L.M.	23/05/2006
Customer		
Project		

Description
A-60 MARINE DAMPER
C/W PNEUMATIC ACTUATOR

Drawing No. AA/F/9862 Revision

This drawing is confidential communication and is the property of Ruskin Air Management Limited and is returnable on request. It is not to be copied, loaned or communicated without the consent of Ruskin Air Management Limited.
This drawing should be considered uncontrolled if it is a printed copy, or has been transmitted outside of Ruskin Air Management Limited, electronically. The live version is the electronic copy held at Ruskin Air Management Ltd.
Please confirm the drawing issue before placing any orders which refer to this drawing.The Information Shown Is Subject To Change Without Notice Due To Continuing Research And Development.