Draw. No AA/F 9707	Rev. .	DIMENSION IN MILLIMETRES	DO NOT SCALE	THIRD ANGLE PROJECTION

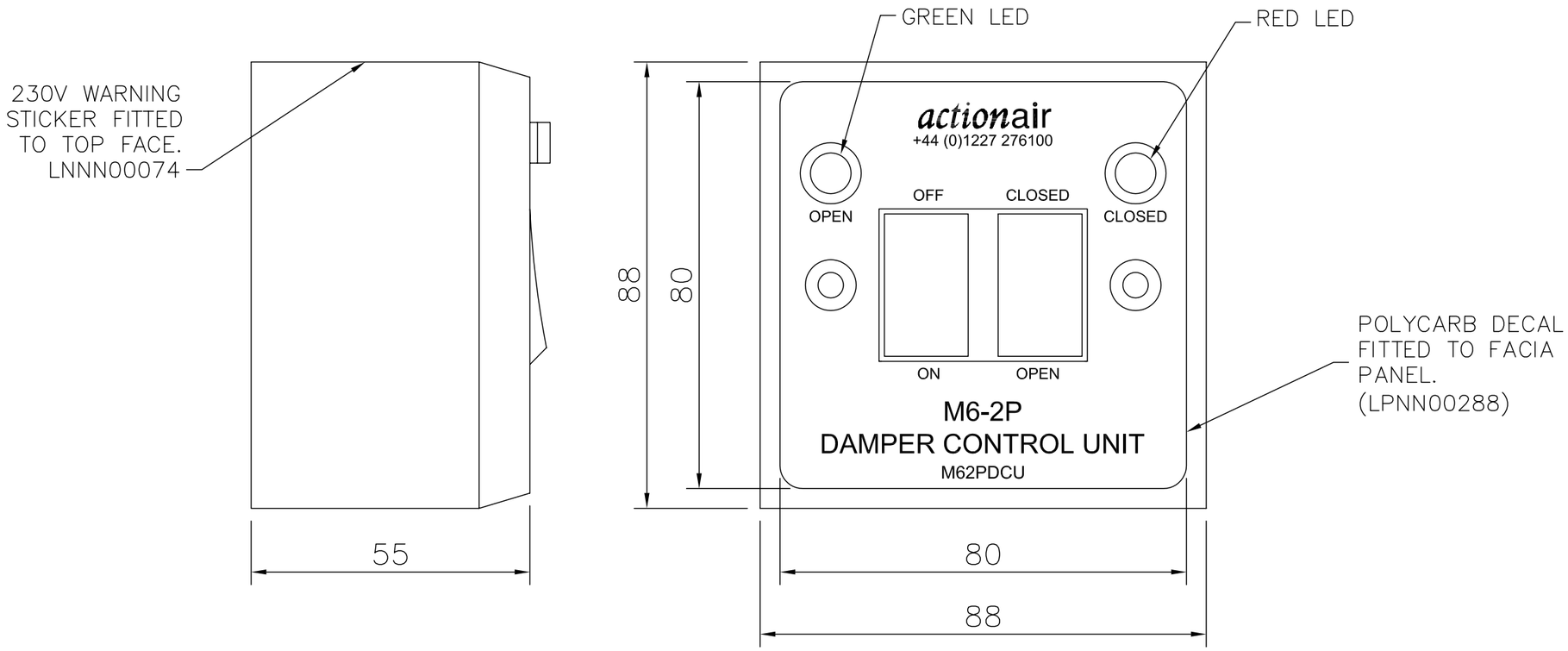

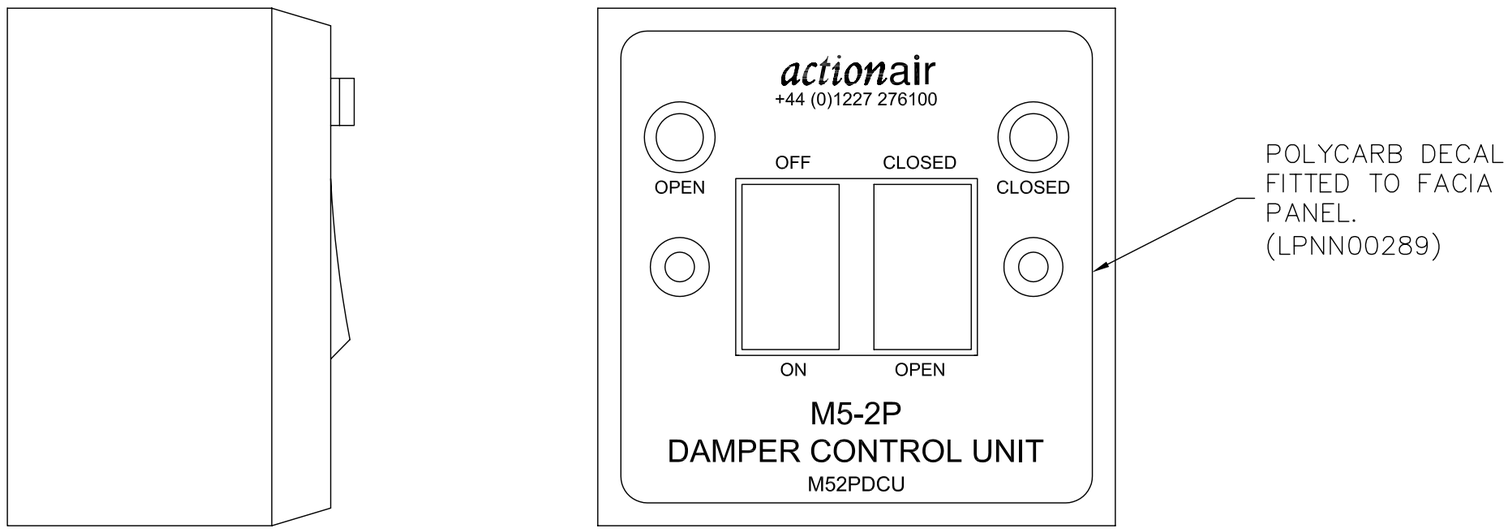

actionair
©RUSKIN AIR MANAGEMENT LIMITED
South Street, Whitstable
Kent CT5 3DU
Telephone: 01227 276100
Facsimile: 01227 264262
www.actionair.co.uk

Notes:

1, FOR WIRING DIAGRAM & PART NUMBERS, REFER TO DRAWINGS:
M5–3P = AA/F 9683
PART No: XNNN00313
M6–3P = AA/F 9682
PART No: XNNN00314

2, 6.35mm ø HOLES REQUIRED FOR LED'S

3, FOR TRUE INDICATION, ONE DEVICE PER DAMPER / SECTION IS REQUIRED.

Rev	Change	Initials	Dates
.	.		.

Drawn By	S.W.	28/07/2005
Checked By	J.H.	04/08/2005
Approved By	S.W.	04/08/2005
Customer	N/A	
Part No:	SEE NOTES	

Title
M6–2P & M5–2P DAMPER CONTROL UNITS.

Drawing No. AA/F 9707 Revision .

This drawing is confidential communication and is the property of Ruskin Air Management Limited and is returnable on request. It is not to be copied, loaned or communicated without the consent of Ruskin Air Management Limited. This drawing should be considered uncontrolled if it is a printed copy, or has been transmitted outside of Ruskin Air Management Limited, electronically. The live version is the electronic copy held at Ruskin Air Management Ltd. Please confirm the drawing issue before placing any orders which refer to this drawing.