Draw. No AA/F 9682	Rev. .	DIMENSION IN MILLIMETRES	DO NOT SCALE	THIRD ANGLE PROJECTION

DAMPER CONTROL UNIT (M6-2P 230 VOLT)

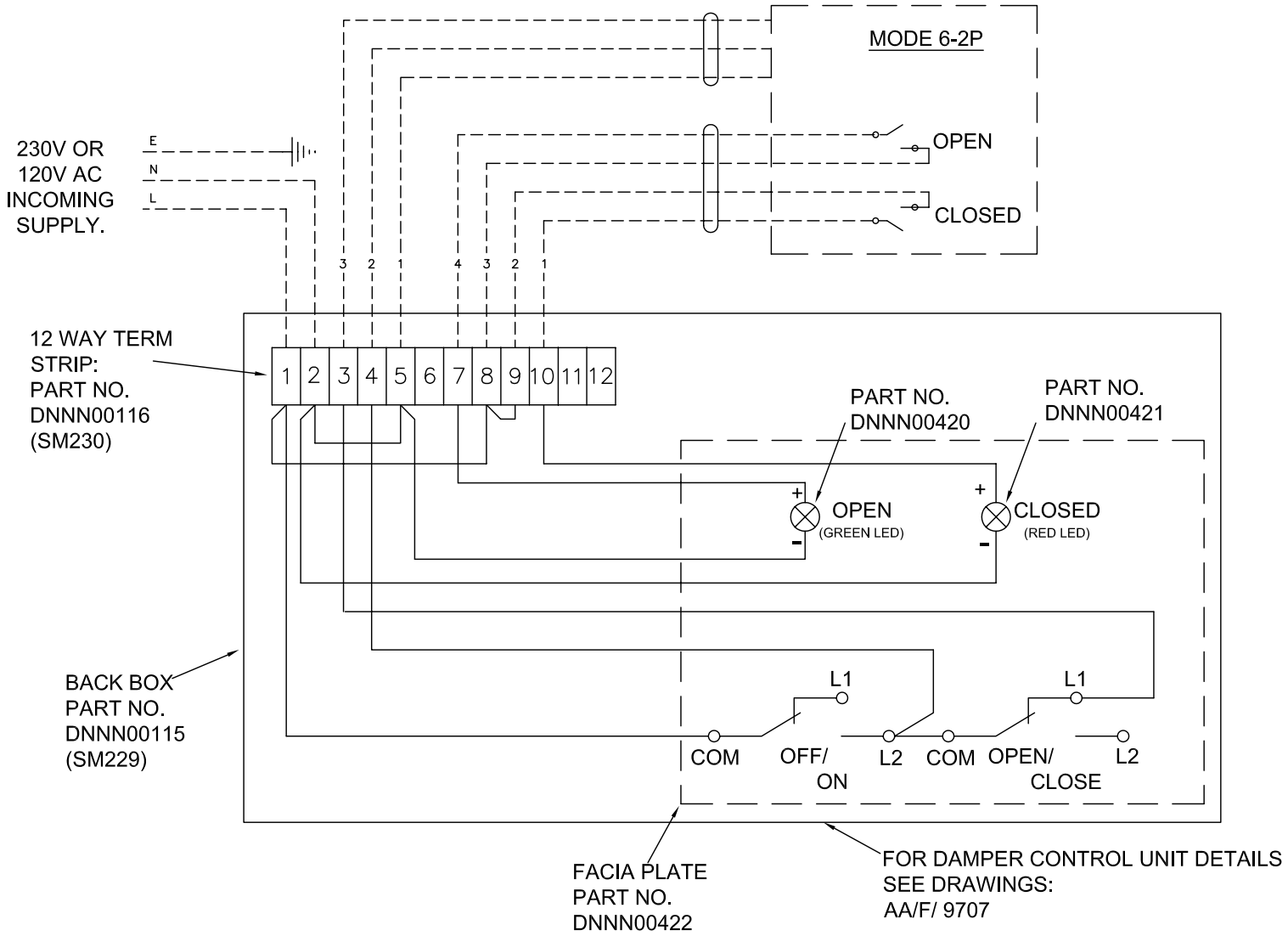

actionair
©RUSKIN AIR MANAGEMENT LIMITED
South Street, Whitstable
Kent CT5 3DU
Telephone: 01227 276100
Facsimile: 01227 264262
www.actionair.co.uk

Notes:

EXTRA PARTS NOT LISTED IN DRAWING (FOR CLARITY):

1, BLACK WIRE 170mm X 3 DNNN00090

3, BLACK WIRE 50mm X 3 DNNN00090

4, FOR DAMPER CONTROL UNIT DETAILS, REFER TO DRAWING AA/F 9707

Rev	Change	Initials	Dates
.	.		.

Drawn By	S.W.	28/07/05
Checked By	J.H.	04/08/2005
Approved By	S.W.	04/08/2005
Customer	N/A	
Part No:	XNNN00314	

Title
M6–2P DAMPER CONTROL UNIT, WIRING DIAGRAM. 230VOLT.

Drawing No. AA/F 9682 Revision .

This drawing is confidential communication and is the property of Ruskin Air Management Limited and is returnable on request. It is not to be copied, loaned or communicated without the consent of Ruskin Air Management Limited. This drawing should be considered uncontrolled if it is a printed copy, or has been transmitted outside of Ruskin Air Management Limited, electronically. The live version is the electronic copy held at Ruskin Air Management Ltd. Please confirm the drawing issue before placing any orders which refer to this drawing.